Turn ALL Power and Breakers OFF BEFORE Starting Install

Dometic Penguin II with Heat Pump

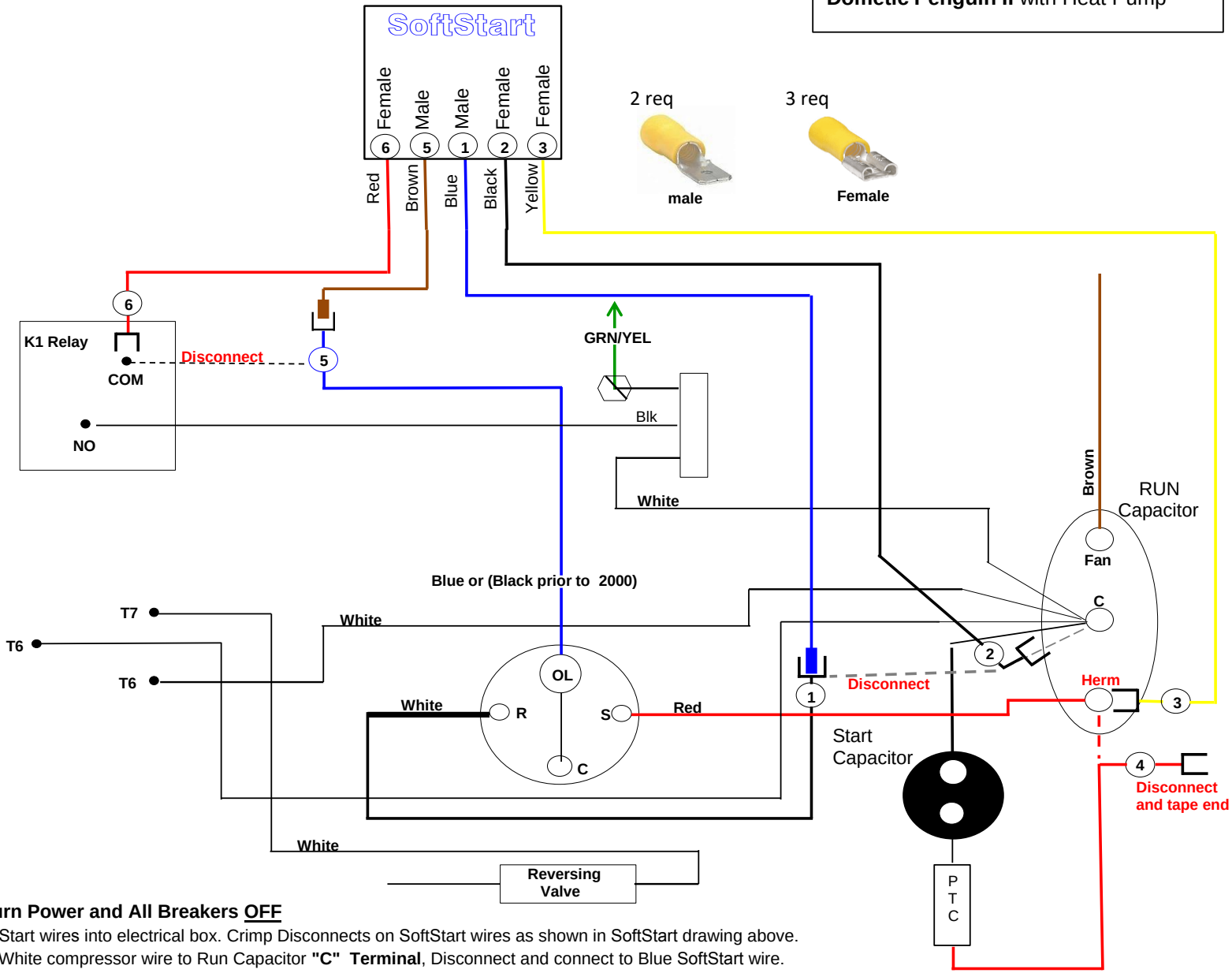

Turn Power and All Breakers OFF

Route ALL SoftStart wires into electrical box. Crimp Disconnects on SoftStart wires as shown in SoftStart drawing above.

Step 1) Follow White compressor wire to Run Capacitor **"C" Terminal**, Disconnect and connect to Blue SoftStart wire.

Step 2) Connect Black SoftStart wire to terminal White wire was on.

Step 3) Connect Yellow SoftStart wire on a terminal next to Red Compressor wire **"HERM"** Terminal.

Step 4) **IF** there is a 2nd red wire next to Red Compressor wire, DISCONNECT and tape end.

Step 5) Follow Blue Compressor wire to Relay. Disconnect and connect to Brown SoftStart wire.

Step 6) Connect Red SoftStart wire to terminal Blue Compressor wire was on.

Secure wires to prevent fan sucking wires in.

Turn Power and AC breaker on, Turn Fan on Hi 1 min, Turn AC on auto cool set thermostat to 55

Look at SoftStart green light should be on (There may be a 3 min delay before Compressor starts)

after green light shut ac down replace all covers and Start AC again and allow it to run for 30 min